BILL OF MATERIALS		
ITEM	QTY	DESCRIPTION
1	1	24" STAND OFF ARM/WALL MOUNT, GALVANIZED
2	4	5/8" X 2-1/2" A325 GALVANIZED BOLT ASSEMBLY

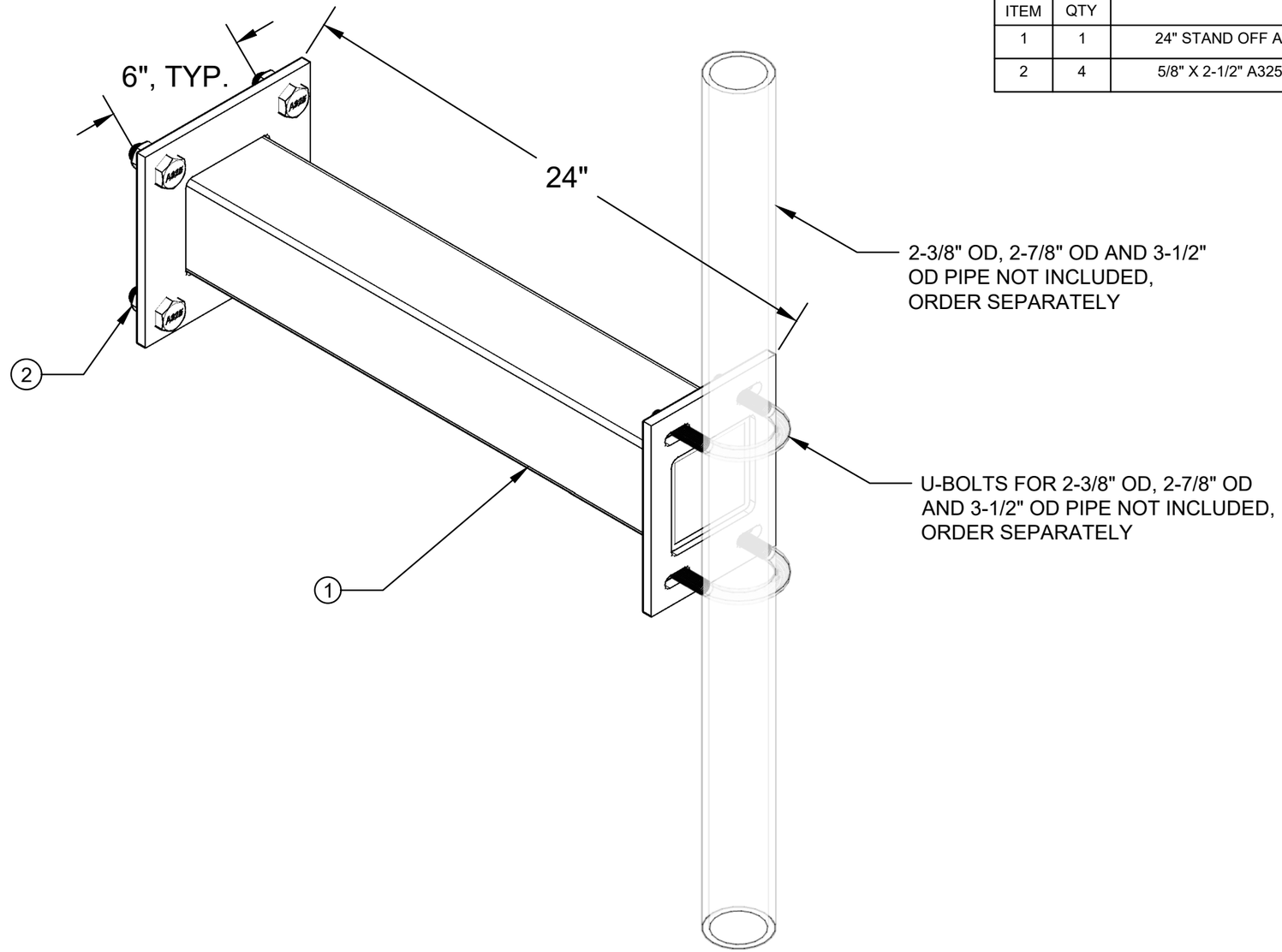

ZONE	REV	DESCRIPTION	DATE	APPROVED

REVISIONS

DATE 03/10/2021	PART NO. VCWM24 VANCOMM ASSEMBLY	DRAWN BY LD
SCALE 1:4	DESCRIPTION STANDOFF WIRELESS WALL MOUNT, 24" STANDOFF	SHEET 1 OF 1

PROPRIETARY NOTE:

THIS DOCUMENT AND THE INFORMATION IT CONTAINS IS PROPRIETARY AND CONFIDENTIAL TO VANCOMM LLC. IT HAS BEEN PROVIDED ONLY FOR YOUR INTERNAL USE IN CONSIDERING A PURCHASE FROM VANCOMM LLC. NEITHER THIS DOCUMENT NOR ANY PORTION THEREOF MAY BE RELEASED OR DISCLOSED TO ANY THIRD PARTY WITHOUT PRIOR CONSENT FROM VANCOMM LLC. PLEASE DESTROY ALL COPIES OF THIS DOCUMENT IF YOU CANNOT ACCEPT THIS PROPRIETARY RESTRICTION. DOCUMENT COPYRIGHT© 2021, VANCOMM LLC.

Vancomm
The Original Mount
Build Not Destroy
2512 Route 73 North, Cinnaminson, NJ 08077