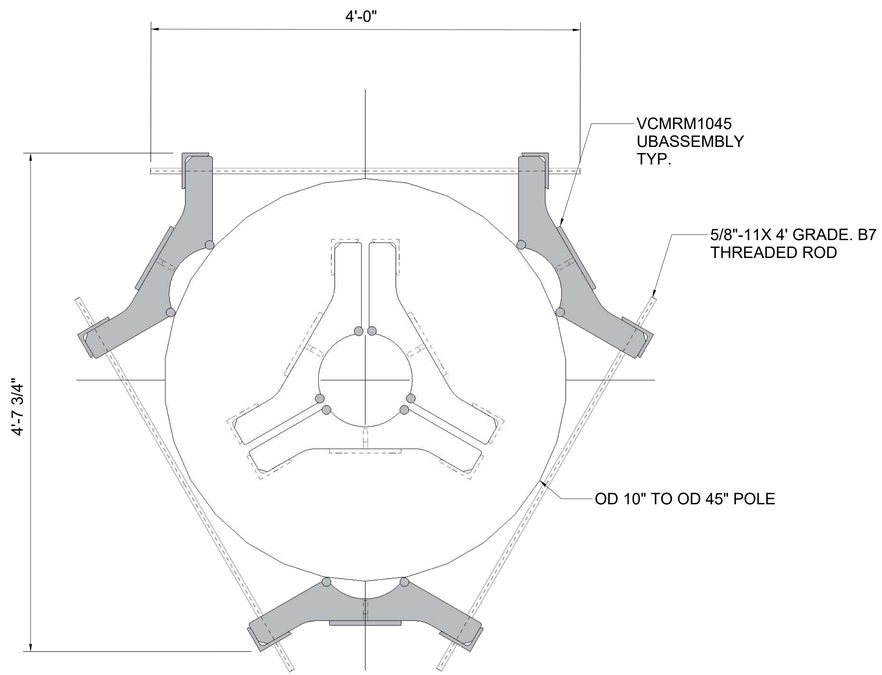

VCMRM1045 ASSEMBLY PLAN-VIEW

SCALE: 1 1/2"=1' (1:8)

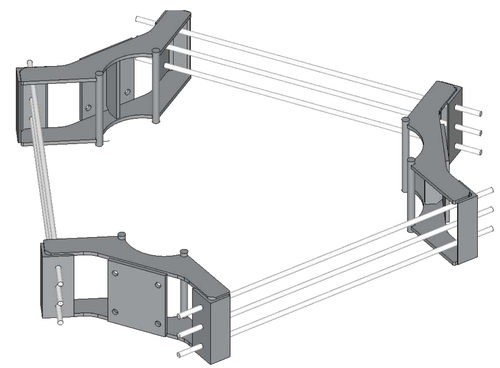

VCMRM1045 - ISOMETRIC-VIEW

SCALE: N.T.S.

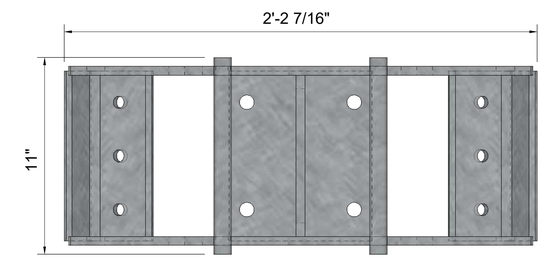

VCMRM1045 SUBASSEMBLY - BACK ELEVATION-VIEW

SCALE: 3"=1' (1:4)

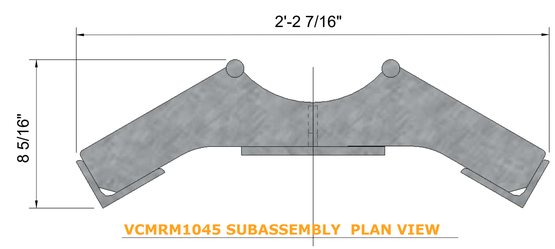

VCMRM1045 SUBASSEMBLY PLAN VIEW

SCALE: 3"=1' (1:4)

DATE	BY	REV	DESCRIPTION	DATE	BY	REV	DESCRIPTION

PRINT RECORD

DATE	BY	REV	DESCRIPTION	DATE	BY	REV	DESCRIPTION
03/02/22	PF	2					
03/02/22	PF	1					

REVISION RECORD

DATE	DWG USAGE:	DWG #:	DRAWN BY:
03/02/22	VANCOMM ASSEMBLY DRAWING	VCMRM1045	PF
SCALE AS NOTED	DWG DESCRIPTION: VANCOMM MONOPOLE RING MOUNT 10" TO 45"	PART #: . AS NOTED	PAGE: 1 of 1

PROPRIETARY NOTE:

THIS DOCUMENT AND THE INFORMATION IT CONTAINS IS PROPRIETARY AND CONFIDENTIAL TO VANCOMM LLC. IT HAS BEEN PROVIDED ONLY FOR YOUR INTERNAL USE IN CONSIDERING A PURCHASE FORM VANCOMM LLC. NEITHER THIS DOCUMENT NOR ANY PORTION THEREOF MAY BE RELEASED OF DISCLOSED TO ANY THIRD PARTY WITHOUT PRIOR CONSENT FROM VANCOMM LLC. PLEASE DESTROY ALL COPIES OF THIS DOCUMENT IF YOU CONNOT ACCEPT THIS PREPRIETARY RESTRUCTION. DOCUMENT COPYRIGHT@2021, VANCOMM LLC.

Vancomm
The Original Mount
Build Not Destroy
2512 Route 73 North, Cinnaminson, NJ 08077